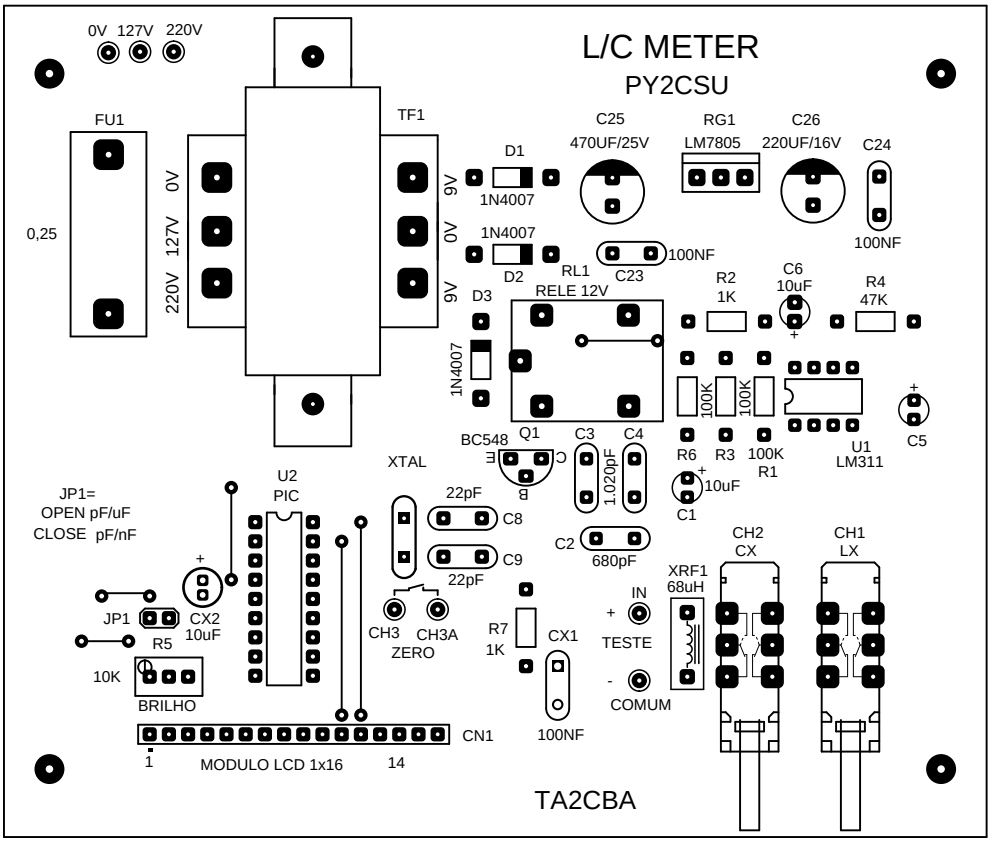
L/C METER
PY2CSU
0V 127V 220V
FU1
0,25
TF1
0V
127V
220V
9V
0V
9V
D1
1N4007
D2
1N4007
D3
1N4007
C25
470UF/25V
RG1
LM7805
C26
220UF/16V
C24
100NF
C23
100NF
RL1
RELE 12V
R2
1K
C6
10uF
R4
47K
100K
100K
R6
R3
100K
R1
U1
LM311
C5
BC548
Q1
C3
C4
1.020pF
10uF
C1
XTAL
22pF
C8
C9
22pF
C2
680pF
U2
PIC
JP1=
OPEN pF/uF
CLOSE pF/nF
JP1
CX2
10uF
R5
10K
BRILHO
CH3
CH3A
ZERO
R7
1K
CX1
100NF
IN
TESTE
COMUM
XRF1
68uH
CH2
CX
CH1
LX
CN1
1
MODULO LCD 1x16
14
TA2CBA